SATAjet 100 B F RP, B P

Order No./ Descr.
1826 Pack of 4 pcs. non-drip devices
3988 Paint strainers pack à 10 pcs.
6395 Pack with 4 CCS-clips
10520 Pack of 12 springs for paint needle
15438 Paint needle packing
17152 Pack of 12 air piston springs
25874 O-ring 9 x 1.5 mm
27243 0.6 l flow cup (plastic), QCC for quick replacement
49395 Screw-on lid with drip-catching ring and non-drip device
76018 Dealer pack with 10 à 10 paint strainers
76026 Packing with 50 sets each containing 10 paint strainers
78154 End cap
91959 Air piston rod
130492 Trigger set
133926 Trigger sleeve set
133934 Pack of 3 gaskets for spindle round / flat spray control
133942 Seal retainer
133959 Spring set w. 3 x paint needle / air piston springs each
133967 Pack of 3 fixing screws
133983 Air connection piece G 1/4 ext.
133991 Pack of 3 air piston heads
139188 Material flow control with counter nut
140574 Control knob and screw (each 1)
140582 Pack of 5 sealing elements for paint nozzle
143230 Pack of 3 air distribution rings

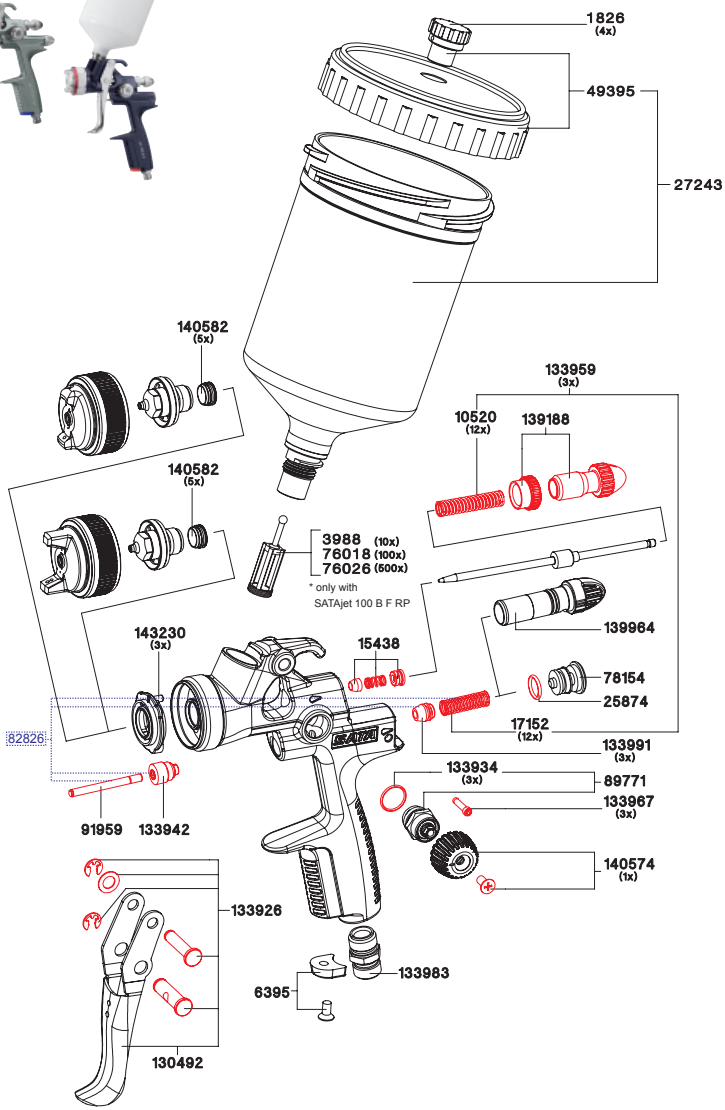

9050

Tool kit

- Removal kit
- Paint sieve
- Cleaning brush
- Allen key
- Internal hexagonal wrench
- Spanner

Order No./ Descr.
130542 Repair kit